Proceedings of ASME Turbo Expo 2011
GT2011
June 6-10, 2011, Vancouver, British Columbia, Canada

GT2011-45051

THE ORegen™ WASTE HEAT RECOVERY CYCLE: REDUCING THE CO_2 FOOTPRINT BY MEANS OF OVERALL CYCLE EFFICIENCY IMPROVEMENT

Paolo Del Turco
GE Oil & Gas
Florence, Italy

Antonio Asti
GE Oil & Gas
Florence, Italy

Alberto Scotti Del Greco
GE Oil & Gas
Florence, Italy

Alessandro Bacci
GE Oil & Gas
Florence, Italy

Giacomo Landi
GE Oil & Gas
Florence, Italy

Giacomo Seghi
GE Oil & Gas
Florence, Italy

ABSTRACT

The growing concern for the role of man-made CO_2 emissions with respect to global warming combined with the large increase in energy demand spurred by developing nations and a growing global population that is foreseen over the next 15 years have recently turned attention to potential CO_2-neutral energy supply solutions.

Waste heat recovery cycles applied to fossil fueled plants offer a local zero-emission solution to producing additional electric energy, thereby increasing the overall plant efficiency with a considerable reduction in the emission of CO_2 per unit of energy produced.

GE Oil & Gas with GE Global Research Europe has developed a new and attractive solution for recovering waste heat energy from a variety of thermal sources ranging from reciprocating combustion engines to gas turbines. This new recovery cycle is called ORegen™.

The ORegen™ recovery cycle is a rankine cycle, with superheating, that recovers waste heat and converts it into electric energy by means of a double closed loop system.

The ORegen™ system represents one of the very few viable solutions for recovering heat from sources (such as mechanical drive gas turbines) whose load may vary dramatically over time or where the equipment is located at a site where water is not readily available.

For the temperature range of interest, a thorough comparison between many working fluids was performed, leading to the conclusion that the substance that delivers the highest efficiency is Cyclopentane.

A high-efficiency Rankine cycle based on such a working fluid places a particularly high demand on the expansion ratio, which influences some of the basic architectural choices of the expander machine.

This article introduces the ORegen™ recovery cycle and describes the process used in GE Oil & Gas to design the family of double supersonic stage turboexpanders, covering the power range of 2-17MW.

Examples of the application of the ORegen™ cycle to gas turbine are also provided to demonstrate attractive opportunities to increase the overall plant efficiency.

NOMENCLATURE

BCs – Boundary Conditions
CAD – Computer Aided Design
CAPEX - Capital Expenditure
CC – Combined Cycle
CO_2 – Carbon Dioxide
DFSS – Design For Six Sigma
DGS – Dry Gas Seals
DOE – Design of Experiments
FEM – Finite Element Method
HP – High Pressure
HCF – High Cycle Fatigue
IGV – Inlet Guide Vane
LP – Low Pressure
LCF – Low Cycle Fatigue
MS – Multistage
OPEX - Operating Expenditure
pp - Percentage Points
PTMIN – Minimum Pumpability Temperature
PTMAX – Maximum Operating Bulk Temperature
WHRU – Waste Heat Recovery Unit
YFT – GE Proprietary Flow Network Solver

This paper is an updated derivative work of the paper that was published at GASTECH 2009

1 INTRODUCTION

In spite of the economic recession, the long-term projection shows that per capita spending is growing. This increase in economic activity means more energy is required to support the growth. In addition, we need to consider the other aspect of the long-term market environment: the end of easy oil. According to a study conducted in 2008 by CERA (Cambridge Energy Research Associates), the average rate of decline of oil and gas wells is 4.5% per year. To sustain growth, new wells need to be discovered, or production from existing ones enhanced. Assuming a projected oil demand of 1.1% year over year, in 2020 an additional ~50 Mbbl/d will be required. These market realities make the community and governments aware of the need to use energy more efficiently, to avoid wasting energy and to regulate CO_2 emissions to reduce the impact of human activities on the environment.

The combustion of hydrocarbons is the process enacted by humans with the highest impact on CO_2 emissions. CO_2 generation is directly tied to the efficiency of energy conversion from hydrocarbons. Waste heat recovery cycles applied to fossil fueled plants means an overall cycle efficiency improvement and a reduction in CO_2 emissions per unit of energy produced.

The limitations of the water-steam Rankine cycle prevent its application as a waste heat recovery process for all gas turbine exhausts. The large thermal inertia of the mass of water circulating in the system and the limited operability range of the Rankine cycle means that it fits as a bottoming cycle when the gas turbine is operated at steady state conditions or with a limited load variation. The other key roadblock to the spread of the combined cycle employing water-steam is water consumption; loss from the sealing and vacuum system means that a substantial water source must be available near the site.

The ORegen™ recovery cycle is a particular kind of combined cycle capable of recovering the waste heat from gas turbines operated in mechanical drive applications and operating in plant locations that do not have a readily available supply of water.

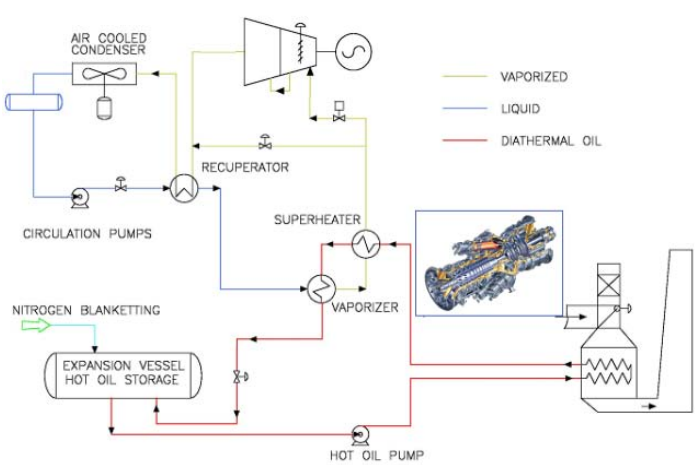

Figure 1 ORegen™ plant schematic

Currently more than 85% of the installed gas turbines used in mechanical drive applications are simple cycle. GE Oil & Gas simple cycle units account for a total output power of ~20 GW that potentially could generate an additional ~4 GW through the use of a heat recovery system. In order to provide an idea of the potential capability of the GT application for ORegen™ recovery cycle, if all those simple cycle gas turbines were coupled with an ORegen™ system, it would be possible to produce enough power for more than 2 million UK homes [1].

2 THE ORegen™ RECOVERY CYCLE

The ORegen™ recovery cycle is a thermodynamic superheat cycle that recovers waste heat from gas turbine exhaust and converts it into electric energy by means of a double closed loop system.

In the first loop, a diathermic oil is used as a heat transfer fluid to carry the heat released from the gas turbine into the waste heat recovery unit heat exchanger system where energy is transferred to the working fluid of the second loop.

The second loop is a thermodynamic cycle based on the Rankine cycle principle in which the working fluid is Cyclopentane, a heavy hydrocarbon (high molecular weight) fluid with a liquid-vapor phase change occurring at a lower temperature than that of the classic combined cycle water-steam phase change (Figure 1).

The working fluid vaporizes within the heat exchanger (vaporizer and superheater) and expands in a turboexpander where its thermodynamic characteristics allow a dry expansion to take place. A recuperator is positioned downstream of the expander and further increases the system efficiency. An air condenser in which the working fluid is liquefied follows the recuperator. The liquid is pumped back to the recuperator and to the heat exchanger system closing the loop [2].

The diathermic oil and the organic fluid allow low temperature heat sources to be exploited efficiently to produce electricity over a wide range of power output, from a few MW up to 17MW per unit.

Table 1 Cyclopentane, R-245fa and Thiophene properties

Fluid Property	R-245fa	Thiophene	Cyclopentane
Boiling point (affects condenser cost)	14.9	84.1	49.3
Freezing point (operability in cold environment)	-103°C	-38°C	-94°C
Molecular weight (increase lowers turbine cost)	134	84.1	70.1
Velocity of vapor line (increase lowers condenser cost)	Fair	Good	Fair

2.1 Working Fluid

The selection of the working fluid is a system design decision with major implications for the performance of the plant. While there are many choices available for working fluids, there are also many constraints on the selection that relate to the thermodynamic properties of the fluid as well as consideration of safety and potential environmental impact [1].

Among others, the condenser pressure gives a first criterion. It was chosen to be always above atmospheric pressure in order to seal the process fluid against any infiltration from the surroundings. Therefore, if ambient air is used as a cooling medium, the boiling temperature at approximately 1 bar, should be sufficiently higher than the ambient temperature. This requirement is satisfied by Cyclopentane, which, at 1 bar, evaporates at about 50°C.

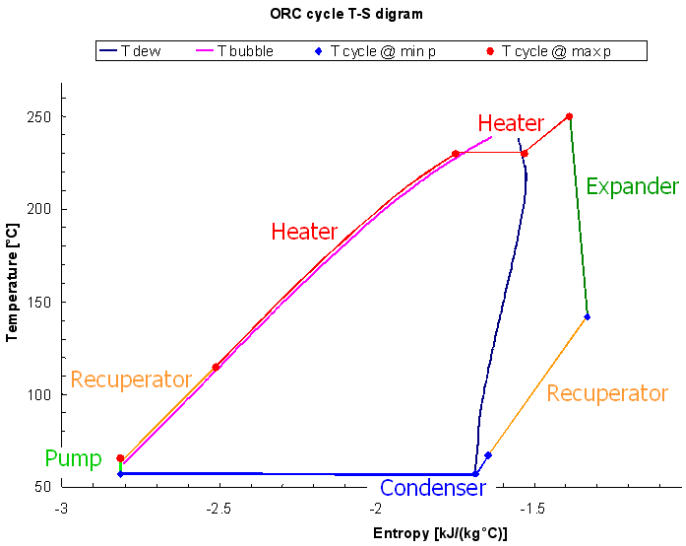

Figure 2 ORegen™ T-S Diagram

After eliminating many possibilities in the pre-screening phase, the final three potential fluids: R-245fa, Thiophene and Cyclopentane. The analysis highlighted Cyclopentane as the most suitable "compromise" fluid for this type of application, giving fair or high performance in all categories. Its main thermo-physical properties (at ambient pressure) are shown in Table 1.

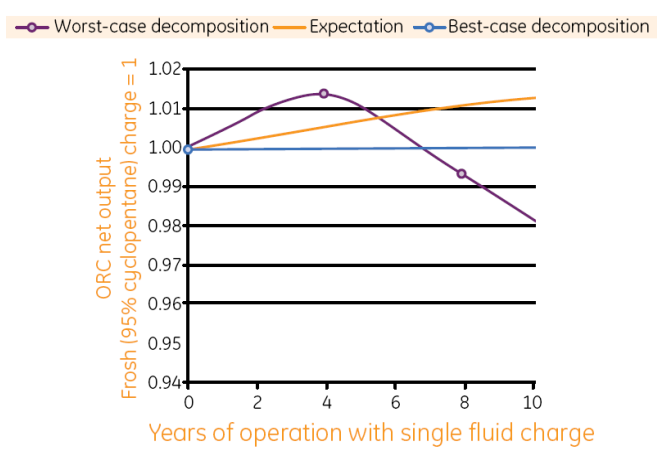

Figure 3 The ORegen™ recovery cycle long-term performance after fluid decomposition

Another important characteristic of Cyclopentane (as well as of other hydrocarbons and refrigerants) is the shape of the saturated vapor curve as viewed in temperature-entropy coordinates (Figure 2). This curve, that for water has a negative slope everywhere, shows a positive slope for portions of the saturation line. This fact, called retrograde behavior, has major implications for Rankine cycles. Normal fluids like water, in fact, require considerable superheat in order to avoid excessive moisture at the turbine exhaust. Retrograde fluids, instead, allow expansion from the saturated vapor line into the superheated region avoiding any moisture during the expansion process. The retrograde behavior also allows recuperating thermal energy from the hot vapor at the discharge of the expander, thus increasing the overall cycle efficiency.

To complete the working fluid assessment, an additional analysis evaluating the long-term behavior of the fluid and the fluid-metal interaction was carried out. The working fluid long-term behavior analysis shows a residual risk due to Cyclopentane decomposition behavior leading to a negligible long-term cycle performance loss of 2% over 10 years (Figure 3).

2.2 Intermediate Loop Fluid

The purpose of the intermediate fluid is to transfer heat from the WHRU installed in the GT exhaust duct to the heat exchanger system heating the working fluid. The selection criteria for the hot oil takes into account the following two main parameters:

1. Minimum pumpability temperature (PTMIN)
2. Temperature operational range

The operational range is defined as the interval between the PTMIN and the maximum operating bulk temperature (PTMAX). The wider the operational range, the more suitable is the fluid. The intermediate fluid selection was performed considering three different potential fluids:

Fluid A: PTMIN= 0° C	PTMAX=345 °C
Fluid B: PTMIN=-40° C	PTMAX=315 °C
Fluid C: PTMIN=-35° C	PTMAX=330 °C

Fluid C was selected as the more suitable for this application since it does not need an oil heater and pipe heat tracing in most applications and it is able to withstand sufficiently high temperature to optimize the cycle efficiency [1]. The main characteristics of the selected intermediate fluid are:

PTMIN	-35°C
PTMAX	330°C
Maximum (recommended) film temp	360°C
Auto-ignition temperature	412°C
Flash point	120°C

4 EXPANDER DESIGN

4.1 The ORegen™ family

The ORegen™ system features scalable design concepts. The basic idea is to have different machine sizes for different classes of power and further refine the design, adjusting the flow-path to the actual flow rate. This solution has been found to be an effective compromise between costs, development schedule and optimal performance. In particular, the aerodynamic design of wheels embraces a "continuous design" philosophy, which allows the stage to always be selected at its design point.

4.2 Aero Design

In accordance with GE's design practice, turboexpander units are selected from a family of curves, which comprises a knowledge base of the company's experience over the years. The most important parameter in the selection of a turboexpander unit is the specific speed Ns, which is defined as follows (quantities are evaluated at the design point):

$$N_s = \frac{N\sqrt{Q_2}}{\Delta h_s^{3/4}} \qquad [1]$$

where
N = rotational speed
Q_2 = outlet volume flow
Δhs = isentropic total-to-static enthalpy drop

Usually Δhs is fixed by the process cycle, as well as by the mass flow rate. Having assumed a reasonable value for the design value of the total-to-static efficiency $\eta_{s,ts}$, Q_2 is also known. Eventually, the specific speed is determined once the rotational speed is assigned. Some iteration may be needed since the design efficiency is a function of the specific speed itself.

Unless other constraints are introduced, the engineers will select the rotating speed that optimizes the specific speed.

Based on the specific speed, the optimal degree of reaction of a turboexpander stage is defined. Usually, low specific speed units are characterized by low degrees of reaction, while higher degrees of reaction are typical of larger values of Ns. The degree of reaction is assigned indirectly by means of the velocity ratio u/c, which is the ratio of the tip speed of the wheel u and the spouting velocity c.

From the tip speed and rotational speed, the wheel diameter is found. Depending on the size, some corrections may be applied to the efficiency in order to take into account the Reynolds effect.

Once the type of stage and the wheel diameter have been fixed, the 1D sizing of the machine takes place.

The datasheet, which is based on the experience of the company, normally provides the designer with the following inputs:

- Mass flow rate $\dot{m}$
- Inlet total pressure p_{01}
- Inlet total temperature T_{01}
- Outlet static pressure p_2
- Outlet actual volume flow rate Q_2
- Rotational speed N

The most important design choice concerns the degree of reaction of the stage, i.e. how to split the whole enthalpy drop across the machine between the nozzles (stator) and the wheel (rotor). Good design practice associates a typical degree of reaction (i.e., wheel diameter) with the specific speed of the machine. A preliminary choice of the diameter will yield the solution that maximizes the design efficiency for a given set of boundary conditions.

According to common practice for turbomachinery, dimensional values are manipulated and transferred into non-dimensional parameters. As for other radial machines (e.g., centrifugal compressors) the following coefficients can be introduced (beside the cited u/c ratio):

- Outlet flow coefficient
- Peripheral Mach number

Based on these parameters, preliminary flow-paths and the metal angle distribution of the wheels are defined. In this approach, the design of a stage follows uniform criteria giving shapes that change smoothly and continuously with the input non-dimensional parameters (continuous stage concept). Basically, the underlying design criteria aims to optimize the nozzle discharge velocity triangle and match the inlet of the wheel with the flow leaving the nozzles.

Usually the high level optimization carried out during the preliminary design prevents the wheel from having major performance issues and accounts for the bulk of the stage efficiency. In a robust design chain, further refinements by means of through-flow and CFD do not change the overall picture. Generally speaking however, these methods provide better insight into the flow physics and really make the difference when Mach numbers are greater than one and simple tools could fail. In this case, the pressure field interaction between the nozzles and the wheel is usually stronger than the wakes impinging on the rotor and more accurate mechanical verifications are needed.

4.2.1 Nozzle aero design

Waste heat recovery cycles equipped with radial turboexpanders typically dictate large pressure ratios per stage in order to increase the overall cycle efficiency. At most operating points, the nozzles are supersonic. The flow pattern is characterized by shock waves and expansion waves interacting with the unsteady pressure field generated by the wheel. Viscous interactions with wakes departing from nozzle trailing edges are also present.

The purpose of the design was to produce a smooth acceleration inside the nozzles in order to minimize profile losses as well as shock waves losses. A DOE technique was used to optimize the final shape of the nozzles, keeping under control the throat location and the curvature distribution.

A typical optimization step is shown in Figure 4 below, reporting the contours of Mach number after the throat.

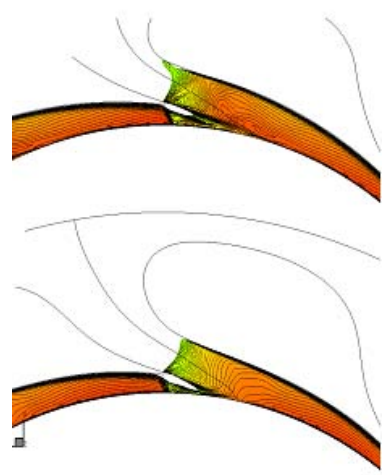

Figure 4 Mach contours

The figure shows that, at the design point, in the original geometry shown on top, the location of the physical throat (where the Mach number reaches unity) is anticipated - on the suction side - with respect to the bottom figure, featuring instead a physical throat very close to the geometrical throat. This is associated with a lower average velocity on the suction side, which normally means smaller friction losses.

4.2.2 Wheel aero design

The aero design optimization process for the wheel employed a DOE technique applied to the most significant geometric parameters. The DOE parameters involved in the analysis were:

- Blade count
- Exit tip diameters
- Axial length of the wheel
- Inlet metal angles

The effect of each variable was explored in a predefined range around the preliminary design values. The blade count was probed in the range of 14-28 and both splitter and no splitter configurations were studied. The exit tip diameter and also the axial length of the wheel varied in the range of 90-120% of their preliminary values. As far as the inlet metal angle is concerned, a configuration with radial blades (90 degrees) and high back-swept value (30 degrees) were studied. The exit metal angles were set to eliminate the swirl at the design point.

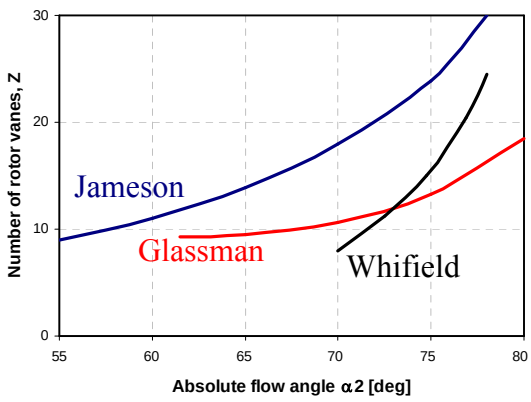

Figure 5 Blade count equations

Following the DOE plan, the operating curves of more than 40 geometries were calculated and compared to each other.

The Multistage (MS) Tacoma code (Holmes et al. [5], Tallman [10]) was used to carry out steady CFD analyses. MS-Tacoma is a fully 3D, compressible, Reynolds–averaged Navier–Stokes flow solver. The solution is advanced in time by a Runge-Kutta algorithm based on the cell–centered, finite volume methods of Jameson [6]. Turbulence effects are accounted for by means of a variety of turbulence models. The application reported in this paper utilizes the k–ωmodel [7].

The blade count was selected according to the Glassman correlation, which links the minimum number of blades with the inlet absolute flow angle [4]. This rule eliminates design choices with too high blade loading at the inlet, which may result in local separations.

Figure 5 shows the Glassman correlation result for flow angles (taken from the radial direction) at nozzle exit in the range of 55°-80°. The Jameson and Whifield equations provide alternative rules and are also reported in the same plot as the reference.

In practice, the blade count turned out to be a compromise between a limited aerodynamic load at the inlet and small friction losses in the region of the throat, where high relative velocities are reached. As far as the inlet metal angle is concerned, radial blades are generally dictated by the material strength and gas temperature. The rotor blades are subjected to high stress levels caused by the centrifugal force field, together with pulsating and unsteady gas flow at high temperatures.

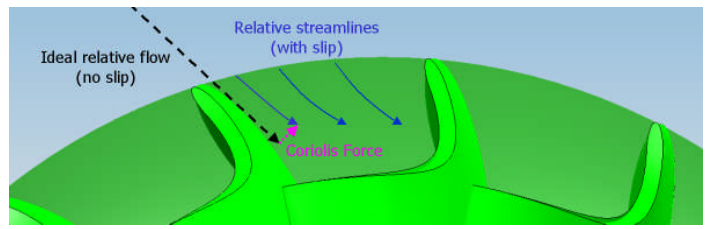

Figure 6 Slip effect

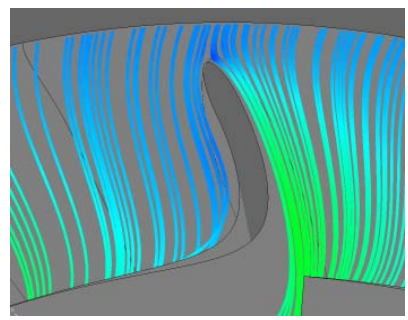

Figure 7 Streamline of flow

Nevertheless, performance gains using back-swept vanes were considered. Back-swept blades were designed considering that there is some incidence angle that provides an optimum flow condition. Flow incidence and associated losses would normally only occur at off-design conditions. However, as reported in (Figure 6), the Coriolis force deeply affects the incidence, and therefore, the relative flow angle at the nozzle exit must be corrected for slip. The slip factor (σ) was evaluated using an adaptation to radial turbines of Wiesner's correlation originally developed for centrifugal compressors [11]:

$$\sigma = 1 - \frac{\sqrt{\cos\beta_2' / Z^{0.7}}}{1 - \phi_2 tg\beta_2'} \qquad [4]$$

where

β_2' = metal angle at the blade inlet

Z = blade count

ϕ_2 = flow coefficient (ratio of radial velocity and peripheral speed at the wheel inlet).

In Figure 7, the streamlines near the design point condition are plotted. The Coriolis effect is clearly visible; the flow approaches the rotor with a negative angle, but due to slip, it impinges on the pressure side of the downstream blades. Then, in the mid-channel, it looks well aligned with the blades.

As far as the exit is concerned, the hub and shroud metal angles were selected to realize an axial absolute flow at the discharge of the wheel. Due to the large volume flow at the exit, the wheel eye diameter is large and the blade very tangential. This choice avoids swirling flow in the diffuser, but, on the other hand, creates some supersonic regions; which are however, confined near the tip (Figure 8).

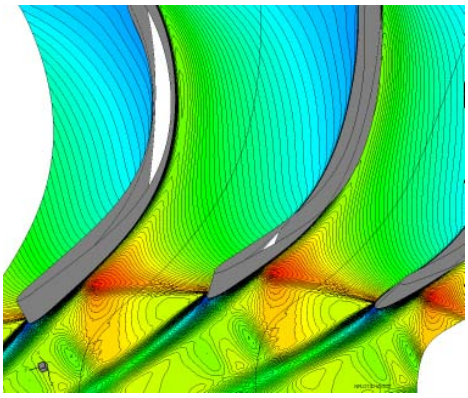

Figure 8 Mach contours near tip section

Finally, special attention was focused on the type of loading. The final design resulted in a uniform acceleration along the wheel channel. This solution was found to be effective in minimizing the profile losses. The pressure distributions from CFD analyses were mapped and used as a boundary condition for detailed mechanical verification and optimization.

4.3 Machine Architecture

The ORegen™ recovery cycle turboexpander generator consists of two stage casings directly coupled with the gearbox to form an integrally geared architecture machine. It is coupled to a synchronous generator via a dry flexible coupling. The two stages are connected through an inter-stage pipe.

The expander wheels are mounted on the high-speed shaft coupled by means of a Hirth serration. The two wheels drive a bull gear rotating at the output speed of the generator (3000 or 3600 rpm).

The product requirements and aero design output were flown down to the system and component levels and a robust design approach was applied to guarantee that the selected design would meet the requirements at all operating conditions. The DFSS approach (application of Six-Sigma principles to the design of products and their manufacturing) was used to set up the probabilistic optimization problem (design variables, constraints, and objective function) and determine the optimal solution of the key performance requirements.

Among the main aspects that were analyzed with a statistical DFSS approach were:

- IGV design
- Thrust analysis
- Selection of seals

The process pressure is controlled by the IGV system. This system consists of a four-bar mechanism that drives the variable nozzle and controls the nozzle throat area. A high accuracy hydraulic cylinder, regulated by process pressure, guarantees the precise positioning of the IGV.

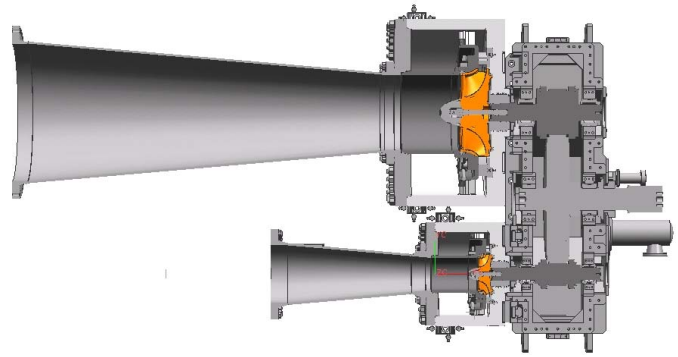

Figure 9 Two-stage integrally geared turboexpander section view

The design of this system took into account the variation contributed by each individual component due to manufacturing and assembly tolerances and it was demonstrated proven to be capable of controlling the nozzle angle with very low uncertainty.

The scope of thrust analysis was to assess the thrust on the gearbox at all operating conditions. The design was required to meet the specification limits of the gearbox collar and axial thrust. The preliminary thrust assessment based on the analytical method highlighted the sensitivity of the thrust load to the boundary conditions (outer diameter pressure, position of balance holes, back wheel seal position, etc). To produce a robust thrust balance design, a cross-functional analysis, with inputs and verifications from CFD, secondary flows and structural analysis was performed. Uncertainties from each variable (pressure distribution along the wheels, aerodynamic forces, position and tolerances of seals, etc) were combined into a Montecarlo analysis to get the overall thrust load variability over different operating conditions.

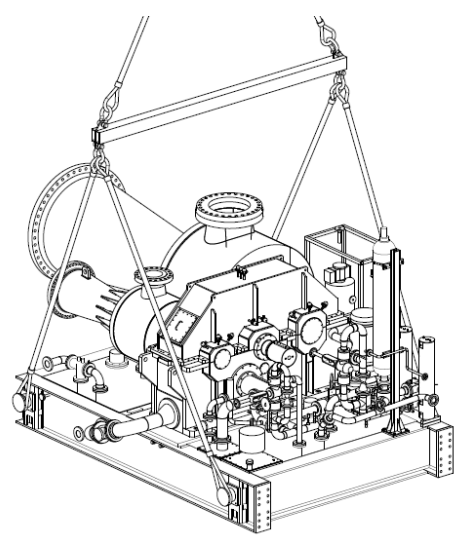

Figure 10 Expander base plate lifting

The sensitivity study led to the optimization of the diameter and position of the balance holes and a suitable position of the back wheel seal diameter to ensure that the thrust loads on the thrust collars and low speed shaft thrust bearing would be within the recommended values (minimizing losses). The risk of thrust inversion was also evaluated. The selected design meets the specification limits with a very good safety factor.

The gas sealing system is required to be capable of minimizing process gas losses during operation and avoiding air infiltrations during stand still conditions. Leakage during operation (escape of process fluid) would contribute to pollution and deteriorate the plant performance by decreasing the inlet enthalpy flux. This leakage may be recovered by condensation. Leakage at standstill conditions (air infiltrations into the circuit) would deteriorate the plant performance by increasing the condenser pressure.

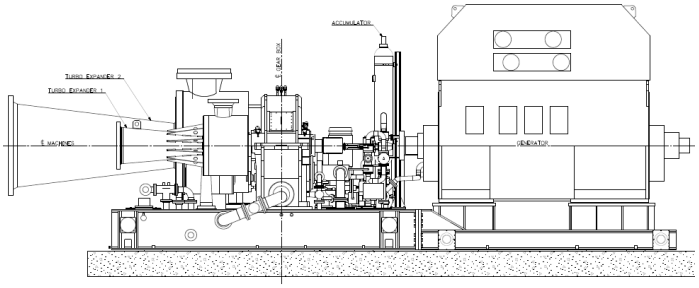

Figure 11 Double-base plate turboexpander generator

Both dry gas seals (DGS) and oil seal options were investigated. A standstill ring whose purpose is to seal the machine during standstill conditions was also investigated. This device is a metallic ring clamped against the rotor by injection of nitrogen once the machine is stopped to prevent both the escape as well as infiltration of gas. The main configurations assessed are:

- Single DGS with standstill ring
- Tandem DGS with standstill ring
- Double DGS without standstill ring
- Oil seal with standstill ring

The double DGS with standstill ring was selected. This solution is the most effective for meeting design requirements for both escape and infiltration issues. The sealing capability was also evaluated statistically and the a probability of leakage was found to be close to zero.

The lube oil system is integrated into the base plate (the oil reservoir is contained within the beams of the base plate). The seal gas and local control system are mounted on the same structural steel base plate. The lube oil cooler will be mounted on a structural steel frame installed on concrete.

The turboexpander base plate and generator base plate are separated (Figure 10 and Figure 11). The double base plate arrangement offers several advantages; a lighter base plate beam can be used for the generator and to facilitate coupling the machine with generators belonging to different companies.

4.4 Secondary Flows and Thermal Assessment

An accurate design of fluid systems and a careful evaluation of the thermal condition of any fluid machine are crucial to achieving satisfactory performance and life targets. To ensure proper and safe operation of the ORegen^{TM} recovery cycle expander, special care was devoted to these aspects, and a great deal of effort was spent in this respect to guarantee the quality of the design of the machine.

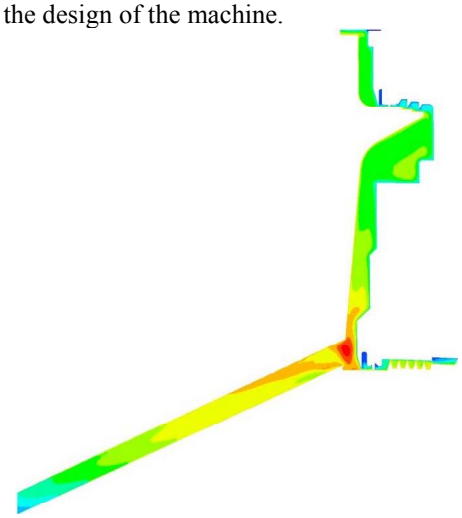

Figure 12 CFD simulation in the cavity behind the wheel

The design process took advantage of several advanced design tools: a proprietary flow network solver YFT was used to simulate the secondary air system; CFD analysis were performed for some of the main cavities to provide support to the YFT modelling and increase the level of detail of the analyses where needed (Figure 12); full 3D P-thermal models were developed to carry out the thermal analysis both at SS and during transients.

YTF simulations were at the core of the entire fluid systems analysis and thermal design activity. The machine architecture entails an almost complete decoupling of the flow networks of the two expansion stages as well as of their thermal behavior; interaction occurs only through the inter-stage pipe. As a consequence a dedicated YFT model was developed for each module.

The interaction in the fluid dynamics was taken into account by setting appropriate boundary conditions (BCs) in the flow network and in the CFD models for each operating condition. The definition of each set of BCs was based on accurate CFD simulations of the aerodynamic behavior of the nozzles and wheels. The models were developed based on specific geometric features (e.g., cavity shape and size, gaps between mating components) and internal GE design practices were intensively used to accurately model specific critical components (such as abradable seals and brush seals).

Once tuned using CFD and field experience or test data when available YFT models became a very powerful design tool through which the design space could be quickly explored. Transfer functions were defined to correlate appropriately selected parameters driving the response of the system in terms of a set of dependent variables relevant to the design of critical aspects (such as leakage and thrust assessment). A transfer function providing the pressure distribution in secondary flow

network as a function of the load was developed. Based on the pressure distribution, the thrust generated by the flow out of the main flow path was calculated. This contribution was added to the thrust produced by momentum variation in the main channel and a DFSS approach was used to statistically define the overall thrust occurring for each particular load condition.

The thermal analysis was also carried out using a different model for each stage (Figure 13 shows the HP rotor thermal model), the thermal interaction between the two occurring again only through the inter-stage pipe. This approach also made it possible to keep the size of the model within acceptable levels. The interaction was modelled by creating a simple standalone model of the pipe, and therefore, the thermal coupling was achieved by a macro-iterative process to match the temperature and the heat flux occurring at each flange. The same approach was used to model the thermal coupling of each module with the gearbox casing.

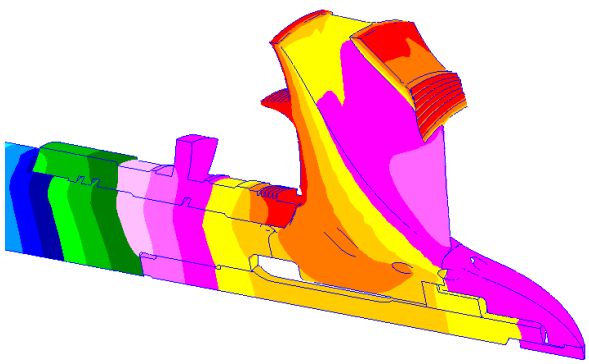

Figure 13 HP temperature field (P-Thermal)

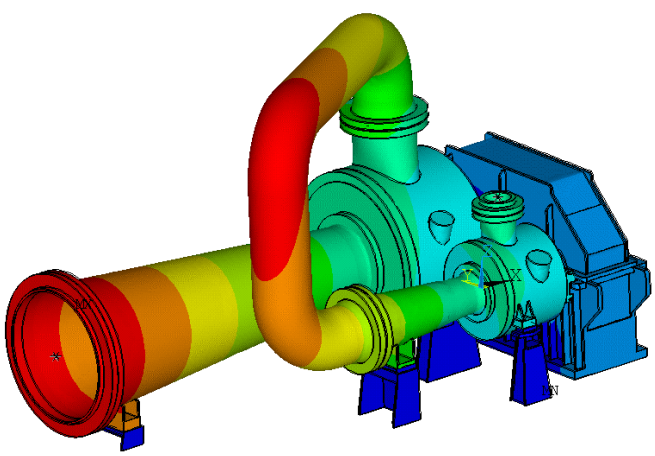

Figure 14 Whole machine model displacements (ANSYS)

4.5 Structural Assessment

The results of the CFD and thermal analysis were useful for both the structural assessment of single components as well as for understanding the rotor-to-stator positioning. Under operating conditions this has a vital impact on clearances (and therefore performance and thrust) at hot conditions during the steady state operations of the machine and during transients. A simplified FEM model of the whole turboexpander was built for this assessment (Figure 14) and was used for a preliminary assessment of the stress of the casings early in the design phase and for the evaluation of the casing-rotor relative displacements. In addition, it allowed the assessment of the forces acting on any stator structure connection. These interactions were taken into account by setting appropriate BCs in the finer models that were successively built and analysed for each component.

FEM structural analysis and life assessments performed as per GE internal design practices (including ASME verification of the casings and flanges) demonstrated that the stress levels are within the life requirements of all components.

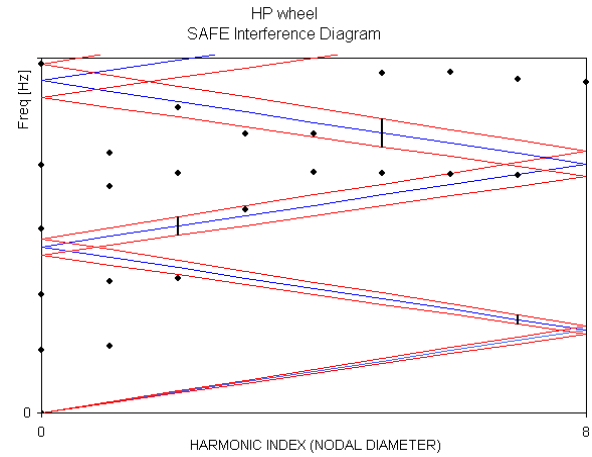

Figure 15 HP wheel SAFE Interference Diagram

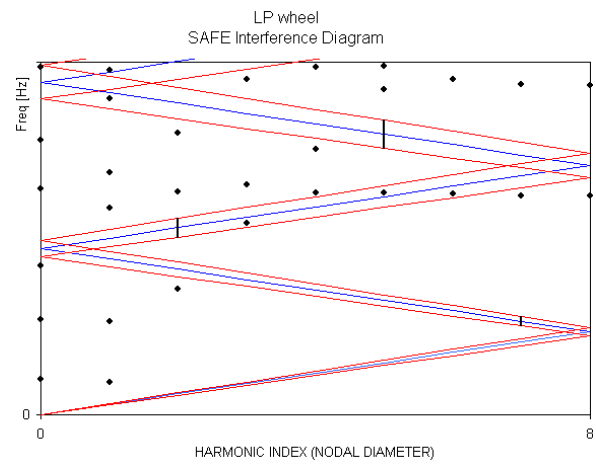

Figure 16 LP wheel SAFE Interference Diagram

The HP and LP wheels are 3-D (three-dimensional formed shape) with 16 airfoils and shrouded with a full cover disk. In order to keep the bulk wheel stress state at acceptable levels, the wheel tip peripheral speed was kept under control from the very initial phase of the aerodynamic design. During the mechanical design, starting from the aero flow path, the whole 3D wheel model was designed, including the wheel features such as labyrinth seals and balancing holes. Based on 3D CAD models, as for the other components, FEM models were prepared and used for thermal-mechanical and modal calculations.

The major limitations for turboexpander wheels are mainly the yielding stress and High Cycle Fatigue (HCF). Those wheels, being uncooled components, are generally not affected by high temperature gradients, therefore Low Cycle Fatigue

(LCF), normally, does not constitute the major life limiting factor. At the same time, thanks to the limited maximum temperatures reached in continuous operation, even creep is normally not a major limiting factor. Nevertheless LCF and creep assessment were also performed, as well as oxidation, corrosion and erosion life assessments.

FEM structural analyses run at maximum continuous speed, maximum temporary overshoot speed and wheel over speed test (room temperature) conditions found stresses at levels well below the life requirements specified in internal GE design practices.

Among the causes that can lead to cracking and failure of a turboexpander wheel, HCF induced failures are treated as a primary design issue. The correct evaluation of the dynamic behavior of the wheels is invaluable to avoid potential resonance crossings. This is achieved starting from the knowledge of which stimuli are affecting the wheels and their natural frequencies and modal shapes; in fact, resonances occur when the stimulus matches the frequency and "modal shape" of the structure. The design was focused on reducing the number of stimuli to a minimum. Stimuli are caused by flow irregularities imposed on the wheel: the upstream IGV, the diffuser struts if present, etc., and their identification is usually straightforward. Figure 15 and Figure 16 show the SAFE (Singh's Advanced Frequency Evaluation [8]) interference diagrams for the HP and LP wheels for the 17MW machine. Both the stress and modal requirements specified by GE internal design practices are fulfilled with a good safety margin [2].

5 ORegen™ CYCLE APPLICATIONS

There are many possible applications of the new ORegen™ system in the world of waste heat recovery. Waste heat sources can be classified on the basis of their exergy level or, in simpler terms, they can be said to have a higher quality if they are available at higher temperatures. Depending on the available temperature, different working fluids can be preferable, as presented previously; the advantage of Cyclopentane is that it guarantees a very good efficiency over a wide waste heat temperature interval that ranges from about 400°C to more than 500°C, while maintaining respectable performance even down to 250°C.

This means that the ORegen™ recovery cycle is well positioned to cover applications such as:

- Gas Turbine Combined Cycle
- Concentrated Solar Power Combined Cycle
- Reciprocating Engine Combined Cycle
- Biomass Power Plants equipped with gas engines
- Geothermal Plants

The performance of the ORegen™ system has been compared with that of a traditional water-steam combined cycle (with condensing pressure below atmospheric); the source of energy was the exhaust of an aero-derivative gas turbine of GE's production, the PGT25+ (Table 2). The comparison has shown that, in spite of an efficiency gap, the ORC is very competitive from the point of view of the investment cost (CAPEX bottom cycle price), due to both the reduced plant footprint and the absence of a water treatment system. These same characteristics result in a faster installation.

The operating fluid refill rate is about 60 times higher for a steam plant, and an ORC waste heat recovery unit, as opposed to a steam recovery unit, does not require continuous operator supervision (depending on local regulations). It follows that a specific advantage of an ORC cycle is its total cost based on a 6-year operating period (up to a major overhaul), which is estimated to be very low compared to that of a classic steam cycle.

Table 2
ORegen™ recovery cycle vs traditional steam CC

	ORegen™	CC(steam)
Output (Net)		+15%
CAPEX Bottom Cycle Price		+25%
CAPEX Water Treatment	Not Required	Required
Installation Time		+20%
Δ Efficiency		+3 pp
OPEX Consumptions (refilling)		60x
OPEX Human Attendance	Not Required	Required (local regulation)
Plant Layout	1600 m^2	2000 m^2
Reliability	98%	98%
Availability	Boroscope 24000h Major 48000h	Minor Overall 24000h Major 48000h

Gross estimate for a single WHRS plant with single turboexpander running at FSFL coupled with a PGT25+.

These factors make the ORegen™ system an ideal choice for those applications that require low initial investment and that are in geographic areas where water is either scarce or difficult to treat. The complete automation of the ORegen™ system allows for complete remote operation and monitoring.

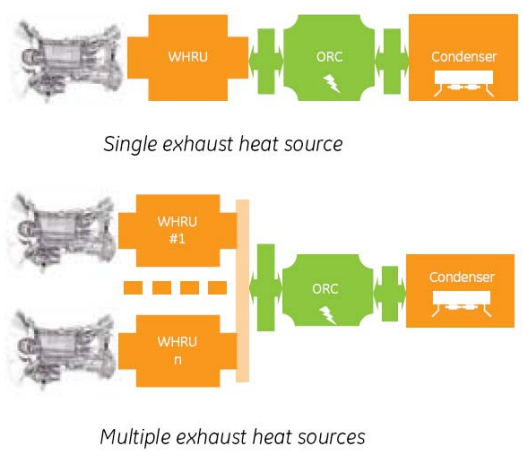

Figure 17 ORegen™ system direct (top) and parallel configurations (bottom)

Additionally, the environmental savings are important from the point of view of both containment of global warming and business opportunity. When coupled with a PGT25+G4 running at base load, ~30000tons/year of CO_2 are saved. This means

that the value generated includes both the sale of the electricity produced from the bottoming cycle, as well as the carbon credits.

The ORegen™ system offers additional benefits with respect to traditional combined cycles. Its intermediate diathermal oil circuit allows the collection of waste heat sources in many different ways. Figure 17 provides an example related to gas turbine combined cycles and shows that, in addition to the traditional one-to-one installation, other configurations are possible, depending on the size and number of the gas turbines installed in the plant. If the size is small, multiple turbines can be connected to a single oil loop. Flexibility of installation is particularly important when the bottoming cycle is added to an existing gas turbine plant.

6 CONCLUSIONS

Addressing environmental problems is becoming an important initiative throughout the world. The reduction of CO_2 emissions is a key element in the path toward lowering the human contribution to climate change.

Many industrial processes generate waste energy that passes out of plant stacks into the atmosphere and is lost. Energy recovered from waste heat streams could supply part or all of the electric power required by a plant, at no additional fuel cost. Therefore, heat recovery offers a great opportunity to conserve by productively using this waste energy to reduce overall plant energy consumption and simultaneously decrease CO_2 emissions. The ORegen™ recovery cycle developed by GE for this scope, with particular focus on the turboexpander design, has been presented.

Table 3
Extimated ORegen™ Recovery Cycle Power Otput
For Mechanical Drive and Power Generation Gas Turbine

Gas Turbine Model	Gas Turbine Power (KW)	Exhaust Flow (Kg/sec)	Exhaust Temp (°C)	Gas Turbine Efficiency (%)	ORegen Gross Output (MWe)	System Efficiency (%)
PGT25 (*)	23,261	68.9	525	37.7	**6.9**	48.9
PGT25+ (*)	31,364	84.3	500	41.1	**7.9**	51.5
PGT25+ G4 (*)	33,973	89.0	510	41.1	**8.6**	51.5
MS5001 (*)	26,830	125.2	483	28.4	**11.3**	40.4
MS5002C (*)	28,340	124.3	517	28.8	**12.4**	41.4
MS5002D (*)	32,580	141.4	509	29.4	**13.8**	41.9
MS6001B (*)	43,530	145.0	544	33.3	**15.6**	45.2
LM6000 (**)	43,397	125.6	454	41.7	**9.7**	51.1

Reference data @ ISO conditions, 100% gas turbine load, one-to-one configuration
(*) Values at gas turbine shaft
(**) Values at generator terminals for LM6000 coupled to 60 Hz generator

The flexible system architecture and reduced footprint allows the ORegen™ recovery cycle to be easily retrofitted into existing plants.

The system can handle the recovery of waste heat from the exhaust from of small to medium size gas turbine. Table 3 represents the summary of the range of power output recovered from the exhaust of the various GE Oil & Gas gas turbine models.

The ORegen™ recovery cycle is a competitive alternative to the standard water-steam Rankine cycle from a life cycle cost and operability standpoint. In many cases, it is the only viable solution for recovering heat from low temperature exhaust or from the exhaust of gas turbines for mechanical drive applications where the load may dramatically vary over time, as well as for equipment located at sites where water is not available.

ACKNOWLEDGMENTS

The authors thank Roberto Biagi and Andrea Burrato, respectively Aero Design Engineer and Product Leader at GE Oil & Gas Headquarters in Florence (Italy), for their important contribution to this work.

REFERENCES

[1] Cinelli F, Miliani A, Seghi G, Reducing the CO2 footprint by means of overall cycle efficiency increasing, GASTECH 2009, Abu Dhabi, UAE, 2009.

[2] Del Turco P, Scotti Del Greco A, Natali D, Borys R, Pieroni N, Biagi R, Design and Optimization of Radial Flow Wheels for a Waste Heat Recovery Double Supersonic Stage Turboexpander, ASME Turbo Expo 2010, Glasgow, Scotland, ASME GT2010-23649, 2010.

[3] Di Pippo, R. "Geothermal Power Plants", 2008, Butterworth-Heiemann.

[4] Dixon S L, B. Eng. Fluid mechanics and thermodynamics of turbomachinery. Butterworth Heinmann Woburn 1998.

[5] Holmes DG, Mitchell BE, Lorence CB, Three Dimensional Linearized Navier–Stokes Calculations for Flutter and Forced response, Proceedings of 8th International Symposium on Unsteady Aerodynamics and Aeroelasticity on Turbomachines, 1997.

[6] Jameson A, Solution of the Euler Equations for Two–Dimensional Transonic Flow by a Multigrid Method, Princeton University Department of Mechanical and Aerospace Engineering (MAE) Report 1613, 1983.

[7] Menter F R, Zonal Two Equation k-ω Turbulence Models for Aerodynamic Flows, AIAA Paper 93-2906, 1993.

[8] Murari P Singh, John J Vargo, Donald M. Schiffer, James D. Dello, Safe Diagram - A Design Reliability Tool for Turbine Blading, Proceedings of the Seventeenth Turbomachinery Symposium, Turbomachinery Laboratory, Texas A&M University, College Station, Texas, 1988.

[9] Singh M P, Cencula E J, Higgins E, Successful Solution to a Turboexpander Wheel failure, Operating in an Erosive Environment of Geothermal Steam, Proceedings of the Middle East Mechanical Engineering Conference, MEMEC 2007, Manama, Kingdom of Bahrain, 2007.

[10] Tallman J, CFD Heat Transfer Predictions for a High–Pressure Turbine Stage, ASME Turbo Expo 2004, Vienna, Austria, ASME GT2004-53654, 2004.

[11] Wiesner F J., 1967, A Review of Slip Factors for Centrifugal Compressors, Journal of Engineering for Gas Turbines Power, 1989.